EANCOM® 2002 S4

INSDES

Instruction to despatch message

Edition 2016 Upd. 2021

1. Introduction 2
2. Message Structure Chart 4
3. Branching Diagram 5
4. Segments Description 10
5. Segments Layout 14
6. Example(s) 61

1. Introduction

Status

MESSAGE TYPE	: INSDES
REFERENCE DIRECTORY	: D.01B
EANCOM® SUBSET VERSION	: 003

Definition

A message from a party to another party who has control over ordered goods, providing instructions to despatch or collect a consignment according to conditions specified in the message.

Principles

The instruction to despatch message may be sent from a supplier or buyer to a third party service provider.

The message may be used to identify at a complete message level or at a line item level;

- the delivery location(s);
- the date(s) on which delivery(s) should take place;
- etc.

Usually the Instruction to Despatch message will be sent following a Cargo/Goods Handling and Movement message which was used to prepare goods for despatch.

The Instruction to Despatch message must not be used to order transport services for the despatch of the goods. The Transport Instruction message must be used for this purpose.

Buyer to Supplier

The Instruction to Despatch message may be used by a buyer to inform his seller to release the despatch of goods previously ordered. In addition the message may be used to instruct the seller to hold the despatch of goods which have been previously reported as being ready for despatch.

Buyer or Supplier to Third Party Service Provider.

When the message is sent from a supplier or a buyer to a third party service provider it may be used to request the service provider to despatch or collect specified goods and identify the delivery location(s), identify the date(s) on which delivery should take place, indicate that the despatch is subject to cash on delivery, etc.

Because the third party service provider is outside the normal buyer to supplier order process, the instruction to despatch message may be used by the supplier or buyer to inform the third party service provider of information stated in the purchase order which is required for the effective despatch of the goods, e.g. terms of delivery, transport equipment required for the delivery; to enable the logistic service provider to produce a despatch advice on behalf of the buyer or supplier.

If the same product is to be delivered to different locations then the LIN segment group (group 10) should be repeated with each delivery location specified in the NAD segment in group 12.

The identification of items to be despatched.

Within the instruction to despatch message, items to be despatched may be identified using either a GTIN or an EAN.UCC Serial Shipping Container Code (SSCC). The following rules of thumb should be used to decide which method of identification should be used and also how to apply the method in the message;

1. Global Trade Item Number (GTIN).

Article numbers should be used to identify despatch units which contain products which are packaged in pre-defined configurations and which have fixed attributes which have normally been specified in a Price/Sales Catalogue. An example of such a product could be a case of 24 tins of peas which costs 3 dollars a case.

1. Introduction

Article numbers should be specified in the LIN segment. If required additional article numbers (e.g. promotional numbers), or other numbers (e.g. harmonised system numbers) may be provided in the PIA segment in conjunction with the appropriate qualifiers. When article numbers are provided in the LIN segment the GIN segment (in group 10) **MUST NOT** be used.

The GIN segment in segment group 13 (PCI-GIN) may only be used when article numbers have been provided in the LIN segment. This segment may be used to provide, for information purposes, SSCC's marked on the product packaging. **This segment may not be used if the GIN segment in segment group 10 has been used.**

2. EAN.UCC Serial Shipping Container Code (SSCC).

SSCC's should be used to identify configurations of products for packaging purposes. An example of such a configuration could be a pallet containing three different products made up of 5 cases of beans, 12 cases of coffee, and 8 cases of orange juice. Each product on the pallet is identified individually by its own article number but the total pallet is identified using an SSCC, a code which exists only for the life time of the pallet.

SSCC's should be specified in the GIN segment in segment group 10. Additional identity numbers (e.g. harmonised system numbers) may be provided in the PIA segment in conjunction with the correct qualifiers. When the GIN segment (in group 10) is being used to provide SSCC's for identification purposes **the GIN segment in group 13 should not be used and only data element 1082 in the LIN segment may be used.**

Primary Id	LIN	PIA	GIN (Group 10)	GIN (Group 13)
Article Number	Y	Y	N	Y
SSCC	ONLY DE 1082	Y	Y	N

2. Message Structure Chart

UNA	1	C	1	- Service string advice
UNB	2	M	1	- Interchange header

Instruction To Despatch Heading Section

UNH	3	M	1	- Message header
BGM	4	M	1	- Beginning of message
DTM	5	M	9	- Date/time/period
FTX	6	C	9	- Free text
SG1		C	9	- RFF-DTM
RFF	7	M	1	- Reference
DTM	8	C	9	- Date/time/period
SG2		C	9	- NAD-LOC-SG3-SG4
NAD	9	M	1	- Name and address
LOC	10	C	9	- Place/location identification
SG3		C	9	- RFF
RFF	11	M	1	- Reference
SG4		C	9	- CTA-COM
CTA	12	M	1	- Contact information
COM	13	C	9	- Communication contact
SG5		C	9	- TOD-LOC
TOD	14	M	1	- Terms of delivery or transport
LOC	15	C	9	- Place/location identification
SG6		C	9	- TDT
TDT	16	M	1	- Details of transport
SG8		C	9	- EQD-MEA
EQD	17	M	1	- Equipment details
MEA	18	C	9	- Measurements

Instruction To Despatch Detail Section

SG10		C	9999	- LIN-PIA-IMD-QTY-GIN-DTM-FTX-MOA-SG11-SG12-SG13
LIN	19	M	1	- Line item
PIA	20	C	9	- Additional product id
IMD	21	C	99	- Item description
QTY	22	C	9	- Quantity
GIN	23	C	99	- Goods identity number
DTM	24	C	9	- Date/time/period
FTX	25	C	9	- Free text
MOA	26	C	99	- Monetary amount
SG11		C	9	- RFF-DTM
RFF	27	M	1	- Reference
DTM	28	C	1	- Date/time/period
SG12		C	99	- NAD-LOC
NAD	29	M	1	- Name and address
LOC	30	C	99	- Place/location identification
SG13		C	9999	- PCI-GIN
PCI	31	M	1	- Package identification
GIN	32	C	9	- Goods identity number

Instruction To Despatch Summary Section

UNS	33	M	1	- Section control
MOA	34	C	99	- Monetary amount
CNT	35	C	9	- Control total
UNT	36	M	1	- Message trailer
UNZ	37	M	1	- Interchange trailer

3. Branching Diagram

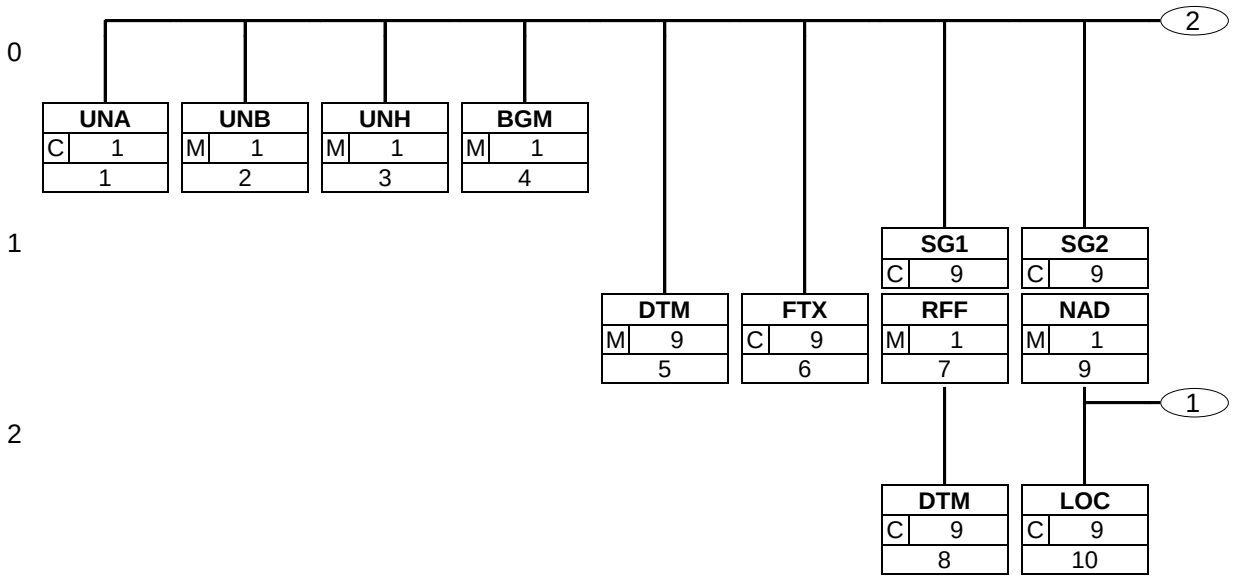

3. Branching Diagram

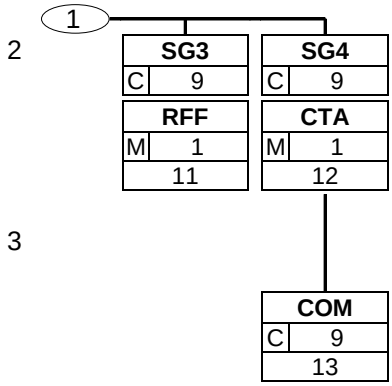

3. Branching Diagram

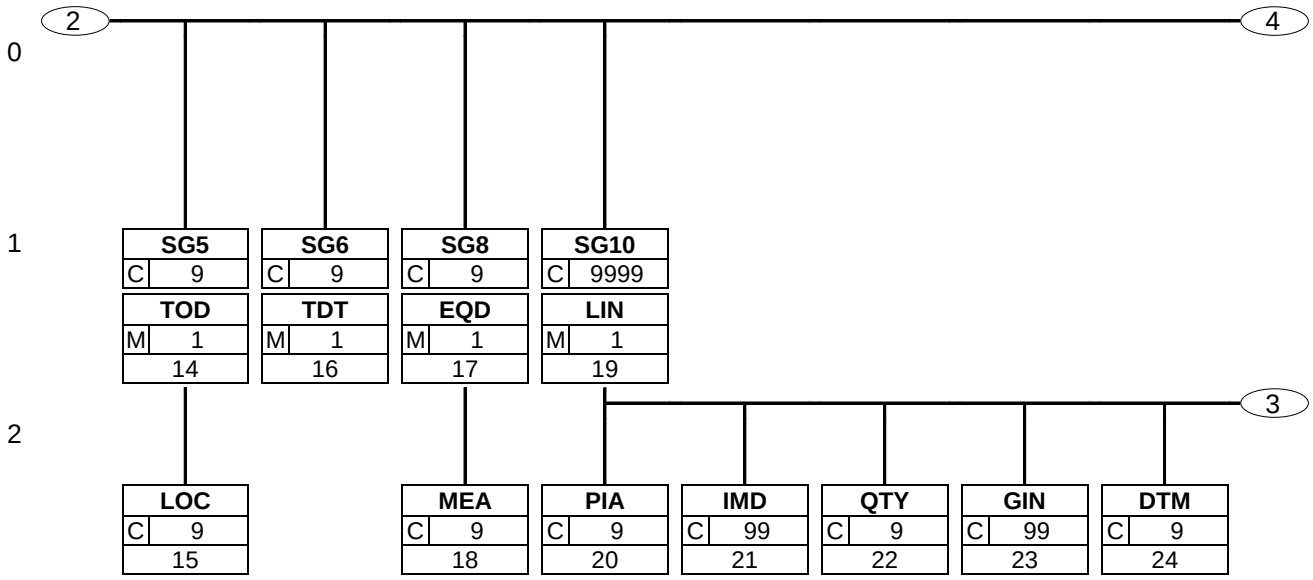

3. Branching Diagram

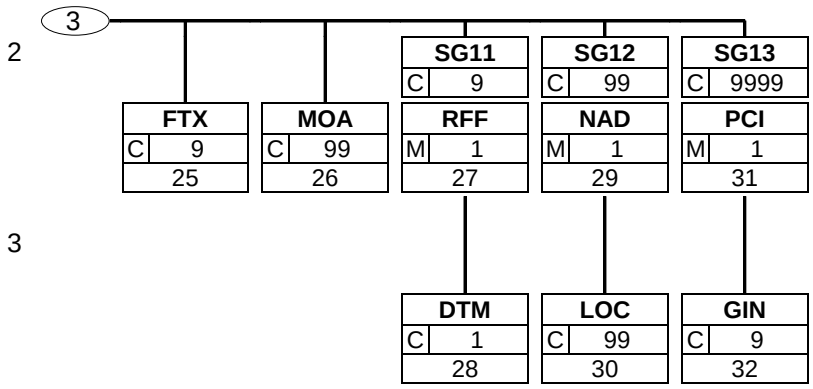

3. Branching Diagram

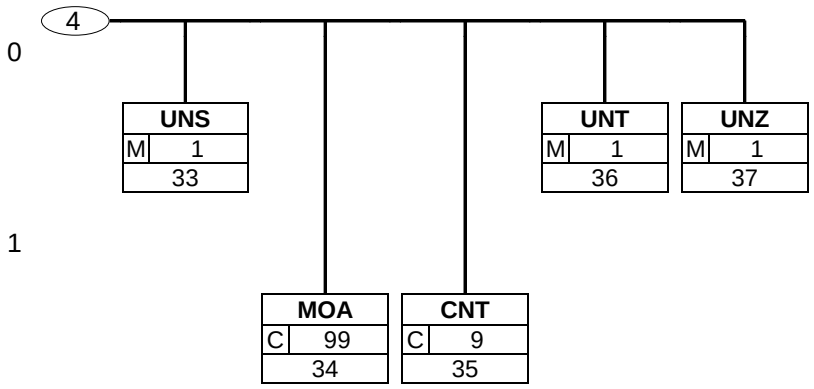

4. Segments Description

UNA - C 1 - Service string advice

This segment is used to inform the receiver of the interchange that a set of service string characters which are different to the default characters are being used.

UNB - M 1 - Interchange header

This segment is used to envelope the interchange, as well as to identify both, the party to whom the interchange is sent and the party who has sent the interchange. The principle of the UNB segment is the same as a physical envelope which covers one or more letters or documents, and which details, both the address where delivery is to take place and the address from where the envelope has come.

Instruction To Despatch Heading Section

UNH - M 1 - Message header

This segment is used to head, identify and specify a message.

BGM - M 1 - Beginning of message

This segment is used to indicate the type and function of a message and to transmit the identifying number.

DTM - M 9 - Date/time/period

This segment is used to specify any dates applicable to the complete instruction to despatch message.

FTX - C 9 - Free text

This segment is used to provide free form or coded text information related to the entire message.

SG1 - C 9 - **RFF-DTM**

A group of segments giving references where necessary, their dates relating to the whole message, e.g. contract number.

RFF - M 1 - Reference

This segment is used to specify references relating to the instruction to despatch.

DTM - C 9 - Date/time/period

This segment is used to specify any dates related to the previous RFF segment.

SG2 - C 9 - **NAD-LOC-SG3-SG4**

A group of segments identifying names, addresses, locations, and references relevant to the identified parties used for the whole message.

NAD - M 1 - Name and address

This segment is used to identify the trading partners involved in the instruction to despatch message. Identification of the supplier/third party service provider and the ordering party is mandatory in the instruction to despatch. Identification of the delivery party is mandatory at line level if the delivery party has not been previously identified in the NAD segment at heading level.

LOC - C 9 - Place/location identification

This segment is used to identify a precise delivery location at the premises of the party identified in the NAD segment.

SG3 - C 9 - **RFF**

A group of segments giving references relevant only to the specified party rather than the whole message.

RFF - M 1 - Reference

This segment is used to specify references related to the party identified in the previous NAD segment.

SG4 - C 9 - **CTA-COM**

A group of segments to identify the people, functions, departments and appropriate numbers to whom communication should be directed.

4. Segments Description

CTA - M 1 - Contact information

This segment is used to identify contact departments and persons within the party specified in the NAD segment.

COM - C 9 - Communication contact

This segment identifies the communications number and type of communications, for the person or department identified in the preceding CTA segment.

SG5 - C 9 - **TOD-LOC**

A group of segments indicating terms of delivery. The terms of delivery will be required by a third party service provider in order to arrange delivery according to the terms agreed in the order.

TOD - M 1 - Terms of delivery or transport

This segment is used to specify the terms of delivery for the instruction to despatch message.

LOC - C 9 - Place/location identification

This segment is used to indicate the location to which the terms of delivery apply.

SG6 - C 9 - **TDT**

A group of segments specifying details of the mode and means of transport relevant to the whole Instruction to Despatch message. The transport details will be required by a third party service provider in order to arrange delivery according to the terms agreed in the order.

TDT - M 1 - Details of transport

This segment is used to specify transport services required by the message sender to despatch the products.

SG8 - C 9 - **EQD-MEA**

A group of segments providing information relative to the equipment used for the transportation of goods relevant to the whole Instruction to Despatch message. The equipment details will be required by a third party service provider in order to arrange delivery according to the terms agreed in the order.

EQD - M 1 - Equipment details

This segment is used to provide information on equipment which will be required by the message sender to despatch the products ordered.

MEA - C 9 - Measurements

This segment is used to specify physical measurements, dimensions or number of pieces of the equipment described in the EQD segment.

Instruction To Despatch Detail Section

SG10 - C 9999 - **LIN-PIA-IMD-QTY-GIN-DTM-FTX-MOA-SG11-SG12-SG13**

A group of segments providing details of individual line items for which Instruction to Despatch message information is being provided.

LIN - M 1 - Line item

This segment is used to identify the line item for which instructions for despatch are being provided.

PIA - C 9 - Additional product id

This segment is used to identify additional product codes for the current line item.

IMD - C 99 - Item description

This segment is used to describe the current line item. Data element 7008 in clear text should only be used when no product code is available or when free-form descriptions are required by trading partners.

QTY - C 9 - Quantity

This segment is used to specify quantity information related to the current line item.

4. Segments Description

GIN - C 99 - Goods identity number

This segment is used to provide SSCC codes for identification purposes only. If used, this segment may be repeated only once per occurance of segment group 10 (LIN) to provide the SSCC as the primary means of identification.

DTM - C 9 - Date/time/period

This segment is used to specify dates related to the current line item only.

FTX - C 9 - Free text

This segment is used to provide free form or coded text information related to the line item.

MOA - C 99 - Monetary amount

This segment is used to specify monetary values related to the current line item, e. g., cash on delivery amount.

SG11 - C 9 - **RFF-DTM**

A group of segments to give reference numbers and dates related to the current line item.

RFF - M 1 - Reference

This segment is used to specify any references which apply to the current line item only. References provided here override those provided in the heading section of the message when the same qualifier is used.

DTM - C 1 - Date/time/period

This segment is used to specify dates related to the references provided in the previous RFF segment.

SG12 - C 99 - **NAD-LOC**

A group of segments providing party information related to the current line item and where relevant, additional locations within the party.

NAD - M 1 - Name and address

This segment is used to identify parties relevant to the current line item only. Identification of the delivery party is mandatory at line level if the delivery party has not been previously identified in the NAD segment at heading level.

LOC - C 99 - Place/location identification

This segment is used to identify the precise location of delivery for the current line item.

SG13 - C 9999 - **PCI-GIN**

A group of segments identifying the marks and numbers on the package for the current line item.

PCI - M 1 - Package identification

This segment is used to provide markings and labels information relevant to the product identified in the LIN segment.

GIN - C 9 - Goods identity number

This segment is used to provide identification numbers marked on the packaging of the current line item.

Instruction To Despatch Summary Section

UNS - M 1 - Section control

This segment is used to identify the break between the message detail and summary sections.

MOA - C 99 - Monetary amount

This segment is used to specify total monetary values relevant to the complete message, e.g. total cash on delivery amount.

4. Segments Description

CNT - C 9	-	Control total This segment is used to provide message control information for checking on the message receiver's in-house system.
UNT - M 1	-	Message trailer This segment is used to end and check the completeness of a message.
UNZ - M 1	-	Interchange trailer This segment is used to provide the trailer of an interchange.

5. Segments Layout

This section describes each segment used in the EANCOM® Instruction To Despatch message. The original EDIFACT segment layout is listed. The appropriate comments relevant to the EANCOM® subset are indicated.

Notes:

1. The segments are presented in the sequence in which they appear in the message. The segment or segment group tag is followed by the (M)andatory / (C)onditional indicator, the maximum number of occurrences and the segment description.

2. Reading from left to right, in column one, the data element tags and descriptions are shown, followed by in the second column the EDIFACT status (M or C), the field format, and the picture of the data elements. These first pieces of information constitute the original EDIFACT segment layout.

   Following the EDIFACT information, EANCOM® specific information is provided in the third, fourth, and fifth columns. In the third column a status indicator for the use of (C)onditional EDIFACT data elements (see 2.1 through 2.3 below), in the fourth column the restricted indicator (see point 3 on the following page), and in the fifth column notes and code values used for specific data elements in the message.

2.1 (M)andatory data elements in EDIFACT segments retain their status in EANCOM®.

2.2 Additionally, there are five types of status for data elements with a (C)onditional EDIFACT status, whether for simple, component or composite data elements. These are listed below and can be identified when relevant by the following abbreviations:

- REQUIRED	**R**	Indicates that the entity is required and must be sent.
- ADVISED	**A**	Indicates that the entity is advised or recommended.
- DEPENDENT	**D**	Indicates that the entity must be sent in certain conditions, as defined by the relevant explanatory note.
- OPTIONAL	**O**	Indicates that the entity is optional and may be sent at the discretion of the user.
- NOT USED	**N**	Indicates that the entity is not used and should be omitted.

2.3 If a composite is flagged as **N, NOT USED**, all data elements within that composite will have blank status indicators assigned to them.

3. Status indicators detailed in the fourth column which directly relate to the code values detailed in the fifth **column** may have two values:

- RESTRICTED	*****	A data element marked with an asterisk (*) in the fourth column indicates that the listed codes in column five are the only codes available for use with this data element, in this segment, in this message.
- OPEN		All data elements where coded representation of data is possible and a restricted set of code values is not indicated are open (no asterisk in fourth column). The available codes are listed in the EANCOM® Data Elements and Code Sets Directory. Code values may be given as examples or there may be a note on the format or type of code to be used.

4. Different colours are used for the code values in the segment details: restricted codes are in red and open codes in blue.

5. Segments Layout

Segment number: 1

UNA	- C	1 - Service string advice			
Function: The service string advice shall begin with the upper case characters UNA immediately followed by six characters in the order shown below. The space character shall not be used in positions 010, 020, 040, 050 or 060. The same character shall not be used in more than one position of the UNA.					
		EDIFACT	GS1	*	Description
UNA1	Component data element separator	M an1	**M**	*	Used as a separator between component data elements contained within a composite data element (default value: ":")
UNA2	Data element separator	M an1	**M**	*	Used to separate two simple or composite data elements (default value: "+")
UNA3	Decimal mark	M an1	**M**	*	Used to indicate the character used for decimal notation (default value:".")
UNA4	Release character	M an1	**M**	*	Used to restore any service character to its original specification (value: "?").
UNA5	Repetition separator	M an1	**M**	*	Used to indicate the character used for repetition separation (value: " * ").
UNA6	Segment terminator	M an1	**M**	*	Used to indicate the end of segment data (default value: " ' ")

Segment Notes:

This segment is used to inform the receiver of the interchange that a set of service string characters which are different to the default characters are being used.
When using the default set of service characters, the UNA segment need not be sent. If it is sent, it must immediately precede the UNB segment and contain the four service string characters (positions UNA1, UNA2, UNA4 and UNA6) selected by the interchange sender.
Regardless of whether or not all of the service string characters are being changed every data element within this segment must be filled, (i.e., if some default values are being used with user defined ones, both the default and user defined values must be specified).
When expressing the service string characters in the UNA segment, it is not necessary to include any element separators.
The use of the UNA segment is required when using a character set other than level A.
UNA:+.?*'

5. Segments Layout

Segment number: 2

UNB - M 1 - Interchange header

Function:

To identify an interchange.

Notes:
1. S001/0002, shall be '4' to indicate this version of the syntax.
2. The combination of the values carried in data elements S002, S003 and 0020 shall be used to identify uniquely the interchange, for the purpose of acknowledgement.

		EDIFACT	GS1	*	Description
S001	SYNTAX IDENTIFIER	M	**M**		See Part I chapter 5.2.7 and segment notes.
0001	Syntax identifier	M a4	**M**	*	UNOA = UN/ECE level A UNOB = UN/ECE level B UNOC = UN/ECE level C UNOD = UN/ECE level D UNOE = UN/ECE level E UNOF = UN/ECE level F UNOG = UN/ECE level G UNOH = UN/ECE level H UNOI = UN/ECE level I UNOJ = UN/ECE level J UNOK = UN/ECE level K UNOW = UN/ECE level W UNOX = UN/ECE level X UNOY = UN/ECE level Y
0002	Syntax version number	M an1	**M**	*	4 = Version 4
0080	Service code list directory version number	C an..6	**N**		
0133	Character encoding, coded	C an..3	**N**		
S002	INTERCHANGE SENDER	M	**M**		
0004	Interchange sender identification	M an..35	**M**		GLN (n13)
0007	Identification code qualifier	C an..4	**R**	*	14 = GS1
0008	Interchange sender internal identification	C an..35	**O**		
0042	Interchange sender internal sub-identification	C an..35	**N**		
S003	INTERCHANGE RECIPIENT	M	**M**		
0010	Interchange recipient identification	M an..35	**M**		GLN (n13)
0007	Identification code qualifier	C an..4	**R**	*	14 = GS1
0014	Interchange recipient internal identification	C an..35	**O**		
0046	Interchange recipient internal sub-identification	C an..35	**N**		
S004	DATE AND TIME OF PREPARATION	M	**M**		
0017	Date	M n8	**M**		CCYYMMDD
0019	Time	M n4	**M**		HHMM
0020	Interchange control reference	M an..14	**M**		Unique reference identifying the interchange. Created

5. Segments Layout

Segment number: 2

		EDIFACT	GS1	*	Description
					by the interchange sender.
S005	RECIPIENT REFERENCE/ PASSWORD DETAILS	C	**O**		
0022	Recipient reference/password	M an..14	**M**		
0025	Recipient reference/password qualifier	C an2	**O**		
0026	Application reference	C an..14	**O**		Message identification if the interchange contains only one type of message.
0029	Processing priority code	C a1	**O**		A = Highest priority
0031	Acknowledgement request	C n1	**O**		1 = Requested
0032	Interchange agreement identifier	C an..35	**O**	*	EANCOM.....
0035	Test indicator	C n1	**O**		1 = Interchange is a test

Segment Notes:

This segment is used to envelope the interchange, as well as to identify both, the party to whom the interchange is sent and the party who has sent the interchange. The principle of the UNB segment is the same as a physical envelope which covers one or more letters or documents, and which details, both the address where delivery is to take place and the address from where the envelope has come.
S001: The character encoding specified in basic code table of ISO/IEC 646 (7-bit coded character set for information interchange) shall be used for the interchange service string advice (if used) and up to and including the composite data element S001 'Syntax identifier' in the interchange header. The character repertoire used for the characters in an interchange shall be identified from the code value of data element 0001 in S001 'Syntax identifier' in the interchange header. The character repertoire identified does not apply to objects and/or encrypted data.
The default encoding technique for a particular repertoire shall be the encoding technique defined by its associated character set specification.
DE 0001: The recommended (default) character set for use in EANCOM® for international exchanges is character set A (UNOA). Should users wish to use character sets other than A, an agreement on which set to use should be reached on a bilateral basis before communications begin.
DE 0004, 0008, 0010 and 0014: Within EANCOM® the use of the Global Location Number (GLN) is recommended for the identification of the interchange sender and recipient.
DE 0008: Identification (e.g. a division) specified by the sender of the interchange, to be included if agreed, by the recipient in response interchanges, to facilitate internal routing.
DE 0014: The address for routing, provided beforehand by the interchange recipient, is used by the interchange sender to inform the recipient of the internal address, within the latter's systems, to which the interchange should be routed. It is recommended that the GLN be used for this purpose.
DE 0007: Identification (e.g. a division) specified by the recipient of the interchange, to be included if agreed, by the sender in response interchanges, to facilitate internal routing.
DE S004: The date and time specified in this composite should be the date and time at which the interchange sender prepared the interchange. This date and time may not necessarily be the same as the date and time of contained messages.
DE 0020: The interchange control reference number is generated by the interchange sender and is used to identify uniquely each interchange. Should the interchange sender wish to re-use interchange control reference numbers, it is recommended that each number be preserved for at least a period of three months before being re-used. In order to guarantee uniqueness, the interchange control reference number should always be linked to the interchange sender's identification (DE 0004).
DE S005: The use of passwords must first be agreed bilaterally by the parties exchanging the interchange.
DE 0026: This data element is used to identify the application, on the interchange recipient's system, to which the interchange is directed. This data element may only be used if the interchange contains only one type of message, (e.g. only invoices). The reference used in this data element is assigned by the interchange sender.
DE 0031: This data element is used to indicate whether an acknowledgement to the interchange is required. The EANCOM® APERAK or CONTRL message should be used to provide acknowledgement of interchange receipt. In addition, the EANCOM® CONTRL message may be used to indicate when an interchange has been rejected

5. Segments Layout

Segment number: 2

due to syntax errors.
DE 0032: This data element is used to identify any underlying agreements which control the exchange of data. Within EANCOM® , the identity of such agreements must start with the letters 'EANCOM', the remaining characters within the data element being filled according to bilateral agreements.

UNB+UNOC:4+5412345678908:14+8798765432106:14+20020102:1000+12345555+++++EANCOMREF 52'

5. Segments Layout

Segment number: 3

UNH - M 1 - Message header

Function:

To head, identify and specify a message.

Notes:
1. Data element S009/0057 is retained for upward compatibility. The use of S016 and/or S017 is encouraged in preference.
2. The combination of the values carried in data elements 0062 and S009 shall be used to identify uniquely the message within its group (if used) or if not used, within its interchange, for the purpose of acknowledgement.

		EDIFACT	GS1	*	Description
0062	Message reference number	M an..14	**M**		Senders unique message reference. Sequence number of the messages in the interchange. DE 0062 in the UNT will be identical. Sender generated.
S009	MESSAGE IDENTIFIER	M	**M**		
0065	Message type	M an..6	**M**	*	INSDES = Instruction to despatch message
0052	Message version number	M an..3	**M**	*	D = Draft version/UN/EDIFACT Directory
0054	Message release number	M an..3	**M**	*	01B = Release 2001 - B
0051	Controlling agency, coded	M an..3	**M**	*	UN = UN/CEFACT
0057	Association assigned code	C an..6	**R**	*	EAN003 = GS1 version control number (GS1 Permanent Code) Indicates that the message is the EANCOM version 003 of the UNSM Instruction to Despatch message.
0110	Code list directory version number	C an..6	**O**		This data element can be used to identify the codelist agreed by the interchange partners, e.g. EAN001 = EANCOM 2002 S4 codelist released on 01.12.2002 by GS1.
0113	Message type sub-function identification	C an..6	**N**		
0068	Common access reference	C an..35	**N**		
S010	STATUS OF THE TRANSFER	C	**N**		
0070	Sequence of transfers	M n..2			
0073	First and last transfer	C a1			
S016	MESSAGE SUBSET IDENTIFICATION	C	**N**		
0115	Message subset identification	M an..14			
0116	Message subset version number	C an..3			
0118	Message subset release number	C an..3			
0051	Controlling agency, coded	C an..3			
S017	MESSAGE IMPLEMENTATION GUIDELINE IDENTIFICATION	C	**N**		
0121	Message implementation guideline identification	M an..14			
0122	Message implementation guideline version number	C an..3			
0124	Message implementation	C an..3			

5. Segments Layout

Segment number: 3

		EDIFACT	GS1	*	Description
	guideline release number				
0051	Controlling agency, coded	C an..3			
S018	SCENARIO IDENTIFICATION	C	**N**		
0127	Scenario identification	M an..14			
0128	Scenario version number	C an..3			
0130	Scenario release number	C an..3			
0051	Controlling agency, coded	C an..3			

Segment Notes:

This segment is used to head, identify and specify a message.
DE's 0065, 0052, and 0054: Indicates that the message is a UNSM Instruction to Despatch message based on the EDIFACT D.01B directory.

Example:
UNH+ME000001+INSDES:D:01B:UN:EAN003'

5. Segments Layout

Segment number: 4

BGM - M 1 - Beginning of message					
Function: To indicate the type and function of a message and to transmit the identifying number.					
		EDIFACT	GS1	*	Description
C002	DOCUMENT/MESSAGE NAME	C	**R**		
1001	Document name code	C an..3	**R**	*	297 = Instruction to collect 240 = Delivery instructions 350 = Despatch order
1131	Code list identification code	C an..17	**N**		
3055	Code list responsible agency code	C an..3	**N**		
1000	Document name	C an..35	**O**		
C106	DOCUMENT/MESSAGE IDENTIFICATION	C	**R**		
1004	Document identifier	C an..35	**R**		Instruction to despatch number assigned by the document sender. For global unique identification of documents Global Document Type Identifier (GDTI) is available.
1056	Version identifier	C an..9	**N**		
1060	Revision identifier	C an..6	**N**		
1225	Message function code	C an..3	**R**	*	1 = Cancellation 5 = Replace 9 = Original 31 = Copy 42 = Confirmation via specific means The message function coded, is a critical data element in this segment. It applies to all data indicated in the message. The following definitions apply for the restricted codes: 1 = Cancellation - An entire previous instruction to despatch is being cancelled. Only the mandatory segments in the message along with the NAD segments identifying the sender and recipient need to be re-transmitted. Identification of the previously sent message should take place in the RFF segment in group 1. 5 = Replace - The current message cancels and replaces a previously sent instruction to despatch message. Identification of the previously sent message should take place in the RFF segment in group 1. 9 = Original - The original transmission of an instruction to despatch. 31 = Copy - A copy of an instruction to despatch which is sent to a third party for information purposes. 42 = Confirmation via other means - A confirmation of a previous instruction to despatch sent by means other than EDI, e.g, fax.
4343	Response type code	C an..3	**N**		
Segment Notes: This segment is used to indicate the type and function of a message and to transmit the identifying number.					

5. Segments Layout

Segment number: 4

All references other than the document number DE 1004 are to be put in the RFF segment.

Example:
BGM+350+31041+9'

5. Segments Layout

Segment number: 5

DTM - M 9 - Date/time/period					
Function: To specify date, and/or time, or period.					
		EDIFACT	GS1	*	Description
C507	DATE/TIME/PERIOD	M	**M**		
2005	Date or time or period function code qualifier	M an..3	**M**	*	2 = Delivery date/time, requested 10 = Shipment date/time, requested 63 = Delivery date/time, latest 64 = Delivery date/time, earliest 69 = Delivery date/time, promised for 76 = Delivery date/time, scheduled for 137 = Document/message date/time
2380	Date or time or period value	C an..35	**R**		
2379	Date or time or period format code	C an..3	**R**		102 = CCYYMMDD 203 = CCYYMMDDHHMM 719 = CCYYMMDDHHMM-CCYYMMDDHHMM

Segment Notes:

This segment is used to specify any dates applicable to the complete instruction to despatch message.
DE 2005: Identification of the 'Document/message date/time' (code value 137) is mandatory in an EANCOM message.

Example:
DTM+137:19941201:102'

5. Segments Layout

Segment number: 6

FTX	- C	9 - Free text			
Function: To provide free form or coded text information.					
		EDIFACT	GS1	*	Description
4451	Text subject code qualifier	M an..3	**M**		BAJ = Information to be printed on despatch advice BLR = Transport document remarks DEL = Delivery information
4453	Free text function code	C an..3	**O**		1 = Text for subsequent use
C107	TEXT REFERENCE	C	**D**		This composite is only used when trading partners have agreed to use mutually defined code values.
4441	Free text value code	M an..17	**M**		
1131	Code list identification code	C an..17	**O**		
3055	Code list responsible agency code	C an..3	**D**		9 = GS1 91 = Assigned by supplier or supplier's agent 92 = Assigned by buyer or buyer's agent
C108	TEXT LITERAL	C	**D**		This composite is only used if coded text can not be used.
4440	Free text value	M an..512	**M**		
4440	Free text value	C an..512	**O**		
4440	Free text value	C an..512	**O**		
4440	Free text value	C an..512	**O**		
4440	Free text value	C an..512	**O**		
3453	Language name code	C an..3	**D**		ISO 639 two alpha code This data element is only used when non coded free text has been provided in data element C108.
4447	Free text format code	C an..3	**N**		

Segment Notes:

This segment is used to provide free form or coded text information related to the entire message.
Use of this segment in free form is not recommended since it may inhibit automatic processing of the instruction to despatch message. Coded references to standard texts is an available functionality which enables automatic processing and reduces transmission overheads. Standard texts should be mutually defined between trading partners and can be used to cover legal or other requirements.

Example:
FTX+DEL+1+001::91'
Code "001" is agreed to express = 'Please note change to carrier from previous order'

FTX+DEL+++CASH ON DELIVERY'

5. Segments Layout

Segment number: 7

SG1	- C	9 -	RFF-DTM
RFF	- M	1 -	Reference

Function:

To specify a reference.

		EDIFACT	GS1	*	Description
C506	REFERENCE	M	**M**		
1153	Reference code qualifier	M an..3	**M**		AAJ = Delivery order number AAN = Delivery schedule number AAU = Despatch note number AWZ = Handling and movement reference number AXA = Instruction to despatch reference number CNE = Consolidated reference number (GS1 Temporary Code) CT = Contract number CU = Consignor's reference number ECN = External consolidation reference number (GS1 Temporary Code) ERC = External recap reference number (GS1 Temporary Code) IP = Import licence number ON = Order number (buyer) RCE = Recap number (GS1 Temporary Code) When data element 1225 in the BGM segment is used with the code values '1, Cancellation' or '5, Replace' then the code value 'IDR' must be included to provide a link with a previous instruction to despatch.
1154	Reference identifier	C an..70	**R**		
1156	Document line identifier	C an..6	**N**		
4000	Reference version identifier	C an..35	**N**		
1060	Revision identifier	C an..6	**N**		

Segment Notes:

This segment is used to specify references relating to the instruction to despatch.

Example:
RFF+CT:52114'

5. Segments Layout

Segment number: 8

SG1	- C	9 -	RFF-DTM
DTM	- C	9 -	Date/time/period

Function:

To specify date, and/or time, or period.

		EDIFACT	GS1	*	Description
C507	DATE/TIME/PERIOD	M	**M**		
2005	Date or time or period function code qualifier	M an..3	**M**	*	171 = Reference date/time
2380	Date or time or period value	C an..35	**R**		
2379	Date or time or period format code	C an..3	**R**		102 = CCYYMMDD

Segment Notes:

This segment is used to specify any dates related to the previous RFF segment.

Example:
DTM+171:20020115:102'

5. Segments Layout

Segment number: 9

SG2	- C	9 -	NAD-LOC-SG3-SG4
NAD	- M	1 -	Name and address

Function:

To specify the name/address and their related function, either by C082 only and/or unstructured by C058 or structured by C080 thru 3207.

		EDIFACT	GS1	*	Description
3035	Party function code qualifier	M an..3	**M**		BY = Buyer DGC = Logistic service provider DP = Delivery party IV = Invoicee OB = Ordered by SU = Supplier WH = Warehouse keeper
C082	PARTY IDENTIFICATION DETAILS	C	**A**		
3039	Party identifier	M an..35	**M**		For identification of parties it is recommended to use GLN - Format n13.
1131	Code list identification code	C an..17	**N**		
3055	Code list responsible agency code	C an..3	**R**	*	9 = GS1
C058	NAME AND ADDRESS	C	**O**		This composite may only be used to fulfill the requirements of directive 2003/58/EC, article 4.
3124	Name and address description	M an..35	**M**		
3124	Name and address description	C an..35	**O**		
3124	Name and address description	C an..35	**O**		
3124	Name and address description	C an..35	**O**		
3124	Name and address description	C an..35	**O**		
C080	PARTY NAME	C	**D**		
3036	Party name	M an..35	**M**		Party Name in clear text.
3036	Party name	C an..35	**O**		
3036	Party name	C an..35	**O**		
3036	Party name	C an..35	**O**		
3036	Party name	C an..35	**O**		
3045	Party name format code	C an..3	**O**		
C059	STREET	C	**D**		
3042	Street and number or post office box identifier	M an..35	**M**		Building Name/Number and Street
3042	Street and number or post office box identifier	C an..35	**O**		Name and/or P.O. Box
3042	Street and number or post office box identifier	C an..35	**O**		
3042	Street and number or post office box identifier	C an..35	**O**		
3164	City name	C an..35	**D**		City/Town, clear text.
C819	COUNTRY SUB-ENTITY DETAILS	C	**D**		

5. Segments Layout

Segment number: 9

		EDIFACT	GS1	*	Description
3229	Country sub-entity name code	C an..9	**O**		
1131	Code list identification code	C an..17	**O**		
3055	Code list responsible agency code	C an..3	**O**		
3228	Country sub-entity name	C an..70	**O**		County/State, clear text.
3251	Postal identification code	C an..17	**D**		Postal code
3207	Country name code	C an..3	**D**		ISO 3166 two alpha code

Segment Notes:

This segment is used to identify the trading partners involved in the instruction to despatch message. Identification of the supplier/third party service provider and the ordering party is mandatory in the instruction to despatch. Identification of the delivery party is mandatory at line level if the delivery party has not been previously identified in the NAD segment at heading level.

Example:
NAD+OB+5411234512309::9'
NAD+DGC+5412345123453::9'

Dependency Notes:
The following composites and data elements are only used when a coded name and address can not be used. The affected composites and data elements are as follows:
C080 - C059 - 3164 - C819 - 3251 - 3207

5. Segments Layout

Segment number: 10

SG2	- C	9 -	NAD-LOC-SG3-SG4
LOC	- C	9 -	Place/location identification

Function:

To identify a place or a location and/or related locations.

		EDIFACT	GS1	*	Description
3227	Location function code qualifier	M an..3	**M**	*	7 = Place of delivery
C517	LOCATION IDENTIFICATION	C	**A**		
3225	Location name code	C an..25	**A**		GLN - Format n13
1131	Code list identification code	C an..17	**O**		
3055	Code list responsible agency code	C an..3	**D**		9 = GS1 DE 3055 must be used if DE 3225 is used and does not contain an UN/LOCODE.
3224	Location name	C an..256	**O**		
C519	RELATED LOCATION ONE IDENTIFICATION	C	**O**		Specify ultimate delivery location, e.g. a specific delivery bay at a retailer.
3223	First related location name code	C an..25	**O**		Global Location Number GLN - Format n13
1131	Code list identification code	C an..17	**O**		
3055	Code list responsible agency code	C an..3	**D**		9 = GS1 DE 3055 must be used if DE 3223 is used and does not contain an UN/LOCODE.
3222	First related location name	C an..70	**O**		
C553	RELATED LOCATION TWO IDENTIFICATION	C	**N**		
3233	Second related location name code	C an..25			
1131	Code list identification code	C an..17			
3055	Code list responsible agency code	C an..3			
3232	Second related location name	C an..70			
5479	Relation code	C an..3	**N**		

Segment Notes:

This segment is used to identify a precise delivery location at the premises of the party identified in the NAD segment.

Example:
LOC+7+5412345678908::9'

5. Segments Layout

Segment number: 11

SG2	- C	9 -	NAD-LOC-SG3-SG4
SG3	- C	9 -	RFF
RFF	- M	1 -	Reference

Function:

To specify a reference.

		EDIFACT	GS1	*	Description
C506	REFERENCE	M	**M**		
1153	Reference code qualifier	M an..3	**M**	*	YC1 = Additional party identification (GS1 Temporary Code) GN = Government reference number VA = VAT registration number
1154	Reference identifier	C an..70	**R**		
1156	Document line identifier	C an..6	**N**		
4000	Reference version identifier	C an..35	**N**		
1060	Revision identifier	C an..6	**N**		

Segment Notes:

This segment is used to specify references related to the party identified in the previous NAD segment.

Example:
RFF+VA:6558774'

5. Segments Layout

Segment number: 12

SG2	- C	9 -	NAD-LOC-SG3-SG4
SG4	- C	9 -	CTA-COM
CTA	- M	1 -	Contact information

Function:

To identify a person or a department to whom communication should be directed.

		EDIFACT	GS1	*	Description
3139	Contact function code	C an..3	**R**		IC = Information contact
C056	DEPARTMENT OR EMPLOYEE DETAILS	C	**O**		
3413	Department or employee name code	C an..17	**O**		
3412	Department or employee name	C an..35	**O**		

Segment Notes:

This segment is used to identify contact departments and persons within the party specified in the NAD segment. The use of Global Location Number GLN - Format n13 - is particularly suitable for this purpose.

Example:
CTA+IC+:W MILLS'

5. Segments Layout

Segment number: 13

SG2	- C	9 -	NAD-LOC-SG3-SG4
SG4	- C	9 -	CTA-COM
COM	- C	9 -	Communication contact

Function:

To identify a communication number of a department or a person to whom communication should be directed.

		EDIFACT	GS1	*	Description
C076	COMMUNICATION CONTACT	M	**M**		
3148	Communication address identifier	M an..512	**M**		
3155	Communication address code qualifier	M an..3	**M**		EM = Electronic mail TE = Telephone AO = Uniform Resource Location (URL)

Segment Notes:

This segment identifies the communications number and type of communications, for the person or department identified in the preceding CTA segment.

Example:
COM+004461879523:FX'

5. Segments Layout

Segment number: 14

SG5	- C	9 -	TOD-LOC
TOD	- M	1 -	Terms of delivery or transport

Function:

To specify terms of delivery or transport.

		EDIFACT	GS1	*	Description
4055	Delivery or transport terms function code	C an..3	**R**	*	4 = Collected by customer 6 = Delivery condition
4215	Transport charges payment method code	C an..3	**O**		DF = Defined by buyer and supplier
C100	TERMS OF DELIVERY OR TRANSPORT	C	**A**		
4053	Delivery or transport terms description code	C an..3	**R**		INCOTERMS (See EANCOM Codes Set) If INCOTERMS are applicable, then DE 3055 has to contain code value "9" and DE 1131 must be used.
1131	Code list identification code	C an..17	**D**		
3055	Code list responsible agency code	C an..3	**D**		9 = GS1
4052	Delivery or transport terms description	C an..70	**O**		
4052	Delivery or transport terms description	C an..70	**O**		

Segment Notes:

This segment is used to specify the terms of delivery for the instruction to despatch message.

Example:
TOD+6++CIF:2E:9'

Dependency Notes:
Data elements 1131 and 3055 are only used if specific terms of delivery codes, which are outside those recommended by EDIFACT, are being used.

5. Segments Layout

Segment number: 15

SG5	- C	9 -	TOD-LOC
LOC	- C	9 -	Place/location identification

Function:

To identify a place or a location and/or related locations.

		EDIFACT	GS1	*	Description
3227	Location function code qualifier	M an..3	**M**	*	1 = Place of terms of delivery
C517	LOCATION IDENTIFICATION	C	**A**		
3225	Location name code	C an..25	**A**		UN/LOCODES
1131	Code list identification code	C an..17	**O**		
3055	Code list responsible agency code	C an..3	**D**	*	6 = UN/ECE (United Nations - Economic Commission for Europe) DE 3055 must be used if DE 3225 is used and does not contain an UN/LOCODE.
3224	Location name	C an..256	**O**		
C519	RELATED LOCATION ONE IDENTIFICATION	C	**N**		
3223	First related location name code	C an..25			
1131	Code list identification code	C an..17			
3055	Code list responsible agency code	C an..3			
3222	First related location name	C an..70			
C553	RELATED LOCATION TWO IDENTIFICATION	C	**N**		
3233	Second related location name code	C an..25			
1131	Code list identification code	C an..17			
3055	Code list responsible agency code	C an..3			
3232	Second related location name	C an..70			
5479	Relation code	C an..3	**N**		

Segment Notes:

This segment is used to indicate the location to which the terms of delivery apply.

Example:
LOC+1+ATSZG::6'

5. Segments Layout

Segment number: 16

SG6	- C	9 -	TDT
TDT	- M	1 -	Details of transport

Function:

To specify the transport details such as mode of transport, means of transport, its conveyance reference number and the identification of the means of transport.
The segment may be pointed to by the TPL segment.

		EDIFACT	GS1	*	Description
8051	Transport stage code qualifier	M an..3	**M**		20 = Main-carriage transport
8028	Means of transport journey identifier	C an..17	**O**		Reference number covering the transport.
C220	MODE OF TRANSPORT	C	**A**		
8067	Transport mode name code	C an..3	**R**		
8066	Transport mode name	C an..17	**N**		
C228	TRANSPORT MEANS	C	**O**		
8179	Transport means description code	C an..8	**D**		23 = Rail bulk car 31 = Truck
8178	Transport means description	C an..17	**D**		
C040	CARRIER	C	**O**		
3127	Carrier identifier	C an..17	**A**		Global Location Number GLN - Format n13
1131	Code list identification code	C an..17	**O**		
3055	Code list responsible agency code	C an..3	**D**		9 = GS1
3128	Carrier name	C an..35	**O**		
8101	Transit direction indicator code	C an..3	**N**		
C401	EXCESS TRANSPORTATION INFORMATION	C	**N**		
8457	Excess transportation reason code	M an..3			
8459	Excess transportation responsibility code	M an..3			
7130	Customer shipment authorisation identifier	C an..17			
C222	TRANSPORT IDENTIFICATION	C	**N**		
8213	Transport means identification name identifier	C an..9			
1131	Code list identification code	C an..17			
3055	Code list responsible agency code	C an..3			
8212	Transport means identification name	C an..35			
8453	Transport means nationality code	C an..3			
8281	Transport means ownership indicator code	C an..3	**N**		

Segment Notes:

5. Segments Layout

Segment number: 16

This segment is used to specify transport services required by the message sender to despatch the products.

Example:
TDT+20++30+31'

Dependency Notes:
Data Elements 8179 and 8178 are only used when the type of transport must be specifically identified, that is, when a generic description such as road transport is unsuitable.

5. Segments Layout

Segment number: 17

SG8	- C	9 -	EQD-MEA
EQD	- M	1 -	Equipment details

Function:

To identify a unit of equipment.

		EDIFACT	GS1	*	Description
8053	Equipment type code qualifier	M an..3	**M**		BPN = Box pallet non exchangeable CN = Container EFP = Exchangeable EUR flat pallet PA = Pallet UL = ULD (Unit load device)
C237	EQUIPMENT IDENTIFICATION	C	**O**		
8260	Equipment identifier	C an..17	**A**		
1131	Code list identification code	C an..17	**O**		
3055	Code list responsible agency code	C an..3	**D**		
3207	Country name code	C an..3	**O**		
C224	EQUIPMENT SIZE AND TYPE	C	**O**		
8155	Equipment size and type description code	C an..10	**O**		
1131	Code list identification code	C an..17	**O**		
3055	Code list responsible agency code	C an..3	**D**		
8154	Equipment size and type description	C an..35	**O**		
8077	Equipment supplier code	C an..3	**O**		1 = Shipper supplied 2 = Carrier supplied
8249	Equipment status code	C an..3	**O**		
8169	Full or empty indicator code	C an..3	**O**		

Segment Notes:

This segment is used to provide information on equipment which will be required by the message sender to despatch the products ordered.

Example:
EQD+UL+93221'

5. Segments Layout

Segment number: 18

SG8	- C	9 -	EQD-MEA
MEA	- C	9 -	Measurements

Function:

To specify physical measurements, including dimension tolerances, weights and counts.

		EDIFACT	GS1	*	Description
6311	Measurement purpose code qualifier	M an..3	**M**		AAE = Measurement PD = Physical dimensions (product ordered)
C502	MEASUREMENT DETAILS	C	**A**		
6313	Measured attribute code	C an..3	**A**		G = Gross weight HT = Height dimension LN = Length dimension T = Tare weight WD = Width dimension
6321	Measurement significance code	C an..3	**O**		3 = Approximately 4 = Equal to
6155	Non-discrete measurement name code	C an..17	**O**		
6154	Non-discrete measurement name	C an..70	**N**		
C174	VALUE/RANGE	C	**R**		
6411	Measurement unit code	M an..3	**M**		
6314	Measurement value	C an..18	**O**		
6162	Range minimum value	C n..18	**O**		
6152	Range maximum value	C n..18	**O**		
6432	Significant digits quantity	C n..2	**O**		
7383	Surface or layer code	C an..3	**N**		

Segment Notes:

This segment is used to specify physical measurements, dimensions or number of pieces of the equipment described in the EQD segment.
To specify the number of pieces of equipment required, DE 6313 is used with code value AAE, DE 6411 with "PCE" and DE 6314 with the number of equipment.

Example:
MEA+AAE+AAB+KGM:1250'

5. Segments Layout

Segment number: 19

SG10	- C	9999 -	LIN-PIA-IMD-QTY-GIN-DTM-FTX-MOA-SG11-SG12-SG13
LIN	- M	1 -	Line item

Function:

To identify a line item and configuration.

		EDIFACT	GS1	*	Description
1082	Line item identifier	C an..6	**R**		Application generated number of the item lines within the instruction to despatch.
1229	Action request/notification description code	C an..3	**N**		
C212	ITEM NUMBER IDENTIFICATION	C	**D**		This composite is only used for the identification of GS1 articles codes. If another coding structure (other than serial shipping container codes) is required, e.g. harmonised system, this composite will not be used and the code will be detailed in the PIA segment.
7140	Item identifier	C an..35	**R**		Format n..14 GTIN- this is the number of the article being despatched.
7143	Item type identification code	C an..3	**R**	*	SRV = GS1 Global Trade Item Number
1131	Code list identification code	C an..17	**N**		
3055	Code list responsible agency code	C an..3	**N**		
C829	SUB-LINE INFORMATION	C	**D**		
5495	Sub-line indicator code	C an..3	**R**		
1082	Line item identifier	C an..6	**R**		
1222	Configuration level number	C n..2	**N**		
7083	Configuration operation code	C an..3	**N**		

Segment Notes:

This segment is used to identify the line item for which instructions for despatch are being provided.
If Global Trade Item Numbers are available it is mandatory to use GTIN within the LIN segment.

Note: If the instruction to despatch is being provided for a full package (e.g. pallet) containing one or more products which have been allocated a serial shipping container code then only the line item number (data element 1082) should be provided in the LIN segment. The serial shipping container code to identify the full package should be specified in the GIN segment (number 21).

Note: Should it be required to provide the SSCC marked on the packaging of the article identified in the LIN segment then the GIN segment in group 13 should be used.

Note on DE 1082:
Numbering rule: In Part I, section 4.10 there is the recommendation “Within EANCOM® it is recommended that the line numbers used in the first occurrence of data element 1082 in the LIN segment be sequential, starting at 1 for each new message.”

Note on DE 7140:
Only the following significant digits are possible:
- 8 digits for GTIN 8 codes
- 12 digits for GTIN 12 codes
- 13 digits for GTIN 13 codes
- 14 digits for GTIN 14 codes

Dependency Note:
C829 is only used when sub-lines are required.

5. Segments Layout

Segment number: 19

FOR A COMPLETE DESCRIPTION ON THE USAGE OF SUB-LINES PLEASE REFER TO PART I, SECTION 4.10.

Examples:
LIN+1++5412345123453:SRV'
Instruction to despatch the product identified by the global trade item number 5412345123453.
LIN+2'
No trade item number provided, serial shipping container code specified in the GIN segment at line level.

5. Segments Layout

Segment number: 20

SG10	- C	9999 -	LIN-PIA-IMD-QTY-GIN-DTM-FTX-MOA-SG11-SG12-SG13
PIA	- C	9 -	Additional product id

Function:
To specify additional or substitutional item identification codes.

		EDIFACT	GS1	*	Description
4347	Product identifier code qualifier	M an..3	**M**	*	1 = Additional identification 2 = Identification for potential substitution 4 = Substituted for 5 = Product identification Product Id function, has the following restricted coded functions: 1 = Additional Identification - To provide an additional identity for the primary global trade item number (GTIN) identified in the LIN segment. The additional code can consist of: A supplemental identification which provides more information complementary to the main trade item number provided in the LIN segment, e.g., a batch number, promotional variant number, etc, or an alternative identification which may be used instead of the main trade item number provided in the LIN segment, e.g., a buyer's article number, a harmonised system number, ect. 2 = Identification for potential substitution - To provide the number of a product which can substitute the product identified by the global trade item number provided in the LIN segment when the latter is temporarily unavailable, e.g. a similar or identical product coded with a different global trade item number (article coded in a different country), a different size of the same product, a similar product with for example a different brand name. 4 = Substituted for - To provide the number of a product which has been replaced by the global trade item number (GTIN) provided in the LIN segment. This information will be passed on to the delivery party in the Despatch Advice message. 5 - Product Identification - To provide the primary product identification code when no GTIN has been provided in the LIN segment.
C212	ITEM NUMBER IDENTIFICATION	M	**M**		
7140	Item identifier	C an..35	**R**		
7143	Item type identification code	C an..3	**R**		NB = Batch number SA = Supplier's article number SN = Serial number SRV = GS1 Global Trade Item Number
1131	Code list identification code	C an..17	**O**		
3055	Code list responsible agency code	C an..3	**D**		9 = GS1 91 = Assigned by supplier or supplier's agent 92 = Assigned by buyer or buyer's agent
C212	ITEM NUMBER IDENTIFICATION	C	**O**		
7140	Item identifier	C an..35	**R**		

5. Segments Layout

Segment number: 20

		EDIFACT	GS1	*	Description
7143	Item type identification code	C an..3	**R**		
1131	Code list identification code	C an..17	**O**		
3055	Code list responsible agency code	C an..3	**D**		
C212	ITEM NUMBER IDENTIFICATION	C	**O**		
7140	Item identifier	C an..35	**R**		
7143	Item type identification code	C an..3	**R**		
1131	Code list identification code	C an..17	**O**		
3055	Code list responsible agency code	C an..3	**D**		
C212	ITEM NUMBER IDENTIFICATION	C	**O**		
7140	Item identifier	C an..35	**R**		
7143	Item type identification code	C an..3	**R**		
1131	Code list identification code	C an..17	**O**		
3055	Code list responsible agency code	C an..3	**D**		
C212	ITEM NUMBER IDENTIFICATION	C	**O**		
7140	Item identifier	C an..35	**R**		
7143	Item type identification code	C an..3	**R**		
1131	Code list identification code	C an..17	**O**		
3055	Code list responsible agency code	C an..3	**D**		

Segment Notes:

This segment is used to identify additional product codes for the current line item.

Examples :
PIA+1+ABF5682:SA'
In this example the PIA segment is used to provide an additional identification to the global trade item number (GTIN) provided in the LIN segment. The global trade item number (GTIN) 5412345123453 provided in the LIN segment refers to the internal supplier's article number ABF5682.

PIA+2+5412345000013:SRV'
This example details the fact that GTIN 5412345000013 is available as a substitute should the product identified in the LIN segment be unavailable.

PIA+4+5412345000013:SRV'
This example details the fact that the originally ordered GTIN 5412345000013 has been replaced by the GTIN provided in the LIN segment.

PIA+5+2209953C001L:AC'
This example details the HIBC code 2209953C001L which is provided as the primary product code because no GTIN was provided in the LIN segment.

5. Segments Layout

Segment number: 21

SG10	- C	9999 -	LIN-PIA-IMD-QTY-GIN-DTM-FTX-MOA-SG11-SG12-SG13
IMD	- C	99 -	Item description

Function:

To describe an item in either an industry or free format.

		EDIFACT	GS1	*	Description
7077	Description format code	C an..3	**R**	*	C = Code (from industry code list) F = Free-form B = Code and text
C272	ITEM CHARACTERISTIC	C	**O**		
7081	Item characteristic code	C an..3	**R**		
1131	Code list identification code	C an..17	**O**		
3055	Code list responsible agency code	C an..3	**D**	*	9 = GS1 Must be used if DE7081 contains an GS1 code.
C273	ITEM DESCRIPTION	C	**A**		
7009	Item description code	C an..17	**O**		CU = Consumer unit (GS1 Permanent Code) DU = Despatch unit (GS1 Permanent Code) TU = Traded unit (GS1 Permanent Code) VQ = Variable quantity product (GS1 Permanent Code)
1131	Code list identification code	C an..17	**O**		
3055	Code list responsible agency code	C an..3	**D**		9 = GS1 91 = Assigned by supplier or supplier's agent 92 = Assigned by buyer or buyer's agent
7008	Item description	C an..256	**O**		
7008	Item description	C an..256	**O**		
3453	Language name code	C an..3	**O**		
7383	Surface or layer code	C an..3	**N**		

Segment Notes:

This segment is used to describe the current line item. Data element 7008 in clear text should only be used when no product code is available or when free-form descriptions are required by trading partners.

Example:
IMD+C++TU::9'
IMD+F++:::CORN CRISPIES:CASE'

5. Segments Layout

Segment number: 22

SG10	- C	9999	-	LIN-PIA-IMD-QTY-GIN-DTM-FTX-MOA-SG11-SG12-SG13
QTY	- C	9	-	Quantity

Function:

To specify a pertinent quantity.

		EDIFACT	GS1	*	Description
C186	QUANTITY DETAILS	M	**M**		
6063	Quantity type code qualifier	M an..3	**M**		21 = Ordered quantity 113 = Quantity to be delivered
6060	Quantity	M an..35	**M**		
6411	Measurement unit code	C an..3	**D**		This DE is only used if the product being identified is of variable quantity.

Segment Notes:

This segment is used to specify quantity information related to the current line item.

Example:
QTY+113:400'

5. Segments Layout

Segment number: 23

SG10	- C	9999	-	LIN-PIA-IMD-QTY-GIN-DTM-FTX-MOA-SG11-SG12-SG13
GIN	- C	99	-	Goods identity number

Function:

To give specific identification numbers, either as single numbers or ranges.

		EDIFACT	GS1	*	Description
7405	Object identification code qualifier	M an..3	**M**	*	AW = Serial shipping container code BJ = Serial shipping container code
C208	IDENTITY NUMBER RANGE	M	**M**		
7402	Object identifier	M an..35	**M**		
7402	Object identifier	C an..35	**N**		
C208	IDENTITY NUMBER RANGE	C	**N**		
7402	Object identifier	M an..35			
7402	Object identifier	C an..35			
C208	IDENTITY NUMBER RANGE	C	**N**		
7402	Object identifier	M an..35			
7402	Object identifier	C an..35			
C208	IDENTITY NUMBER RANGE	C	**N**		
7402	Object identifier	M an..35			
7402	Object identifier	C an..35			
C208	IDENTITY NUMBER RANGE	C	**N**		
7402	Object identifier	M an..35			
7402	Object identifier	C an..35			

Segment Notes:

This segment is used to provide SSCC codes for identification purposes only. If used, this segment may be repeated only once per occurance of segment group 10 (LIN) to provide the SSCC as the primary means of identification.
Note: If a serial shipping container is identified in this segment then no product identification should be provided in composite C212 of the LIN segment.

Example:
GIN+AW+354123450000000014'
Despatch the package identified by the serial shipping container code 354123450000000014.

5. Segments Layout

Segment number: 24

SG10	- C	9999 -	LIN-PIA-IMD-QTY-GIN-DTM-FTX-MOA-SG11-SG12-SG13
DTM	- C	9 -	Date/time/period

Function:

To specify date, and/or time, or period.

		EDIFACT	GS1	*	Description
C507	DATE/TIME/PERIOD	M	**M**		
2005	Date or time or period function code qualifier	M an..3	**M**	*	2 = Delivery date/time, requested 10 = Shipment date/time, requested 36 = Expiry date 63 = Delivery date/time, latest 64 = Delivery date/time, earliest 69 = Delivery date/time, promised for 361 = Best before date
2380	Date or time or period value	C an..35	**R**		
2379	Date or time or period format code	C an..3	**R**	*	102 = CCYYMMDD 203 = CCYYMMDDHHMM

Segment Notes:

This segment is used to specify dates related to the current line item only.

Example:
DTM+2:19951112:102'

5. Segments Layout

Segment number: 25

SG10	- C	9999 -	LIN-PIA-IMD-QTY-GIN-DTM-FTX-MOA-SG11-SG12-SG13
FTX	- C	9 -	Free text

Function:

To provide free form or coded text information.

		EDIFACT	GS1	*	Description
4451	Text subject code qualifier	M an..3	**M**		BLR = Transport document remarks DEL = Delivery information
4453	Free text function code	C an..3	**O**	*	1 = Text for subsequent use
C107	TEXT REFERENCE	C	**D**		This composite is only used when trading partners have agreed to use mutually defined code values.
4441	Free text value code	M an..17	**M**		
1131	Code list identification code	C an..17	**O**		
3055	Code list responsible agency code	C an..3	**D**		91 = Assigned by supplier or supplier's agent 92 = Assigned by buyer or buyer's agent
C108	TEXT LITERAL	C	**D**		This composite is only used if coded text can not be used.
4440	Free text value	M an..512	**M**		
4440	Free text value	C an..512	**O**		
4440	Free text value	C an..512	**O**		
4440	Free text value	C an..512	**O**		
4440	Free text value	C an..512	**O**		
3453	Language name code	C an..3	**D**		ISO 639 two alpha code This data element is only used when non coded free text has been provided in data element C108.
4447	Free text format code	C an..3	**N**		

Segment Notes:

This segment is used to provide free form or coded text information related to the line item.
Use of this segment in free form is not recommended since it may inhibit automatic processing of the instruction to despatch. Coded references to standard texts is an available functionality which enables automatic processing and reduces transmission and processing overheads. Standard texts should be mutually defined between trading partners and can be used to cover legal or other requirements.

Example:
FTX+DEL+1+002::91'

5. Segments Layout

Segment number: 26

SG10	- C	9999 -	LIN-PIA-IMD-QTY-GIN-DTM-FTX-MOA-SG11-SG12-SG13
MOA	- C	99 -	Monetary amount

Function:

To specify a monetary amount.

		EDIFACT	GS1	*	Description
C516	MONETARY AMOUNT	M	**M**		
5025	Monetary amount type code qualifier	M an..3	**M**	*	22 = Cash on delivery amount 40 = Customs value 157 = Insurance value
5004	Monetary amount	C n..35	**R**		
6345	Currency identification code	C an..3	**O**		
6343	Currency type code qualifier	C an..3	**N**		
4405	Status description code	C an..3	**N**		

Segment Notes:

This segment is used to specify monetary values related to the current line item, e.g., cash on delivery amount.

Example:
MOA+22:5000'

5. Segments Layout

Segment number: 27

SG10	- C	9999	-	LIN-PIA-IMD-QTY-GIN-DTM-FTX-MOA-SG11-SG12-SG13
SG11	- C	9	-	RFF-DTM
RFF	- M	1	-	Reference

Function:

To specify a reference.

		EDIFACT	GS1	*	Description
C506	REFERENCE	M	**M**		
1153	Reference code qualifier	M an..3	**M**		AAJ = Delivery order number AAN = Delivery schedule number AWZ = Handling and movement reference number CT = Contract number IP = Import licence number ON = Order number (buyer)
1154	Reference identifier	C an..70	**R**		
1156	Document line identifier	C an..6	**O**		
4000	Reference version identifier	C an..35	**N**		
1060	Revision identifier	C an..6	**N**		

Segment Notes:

This segment is used to specify any references which apply to the current line item only. References provided here override those provided in the heading section of the message when the same qualifier is used.

Example:
RFF+CT:CT051523'

5. Segments Layout

Segment number: 28

SG10	- C	9999	-	LIN-PIA-IMD-QTY-GIN-DTM-FTX-MOA-SG11-SG12-SG13
SG11	- C	9	-	RFF-DTM
DTM	- C	1	-	Date/time/period

Function:

To specify date, and/or time, or period.

		EDIFACT	GS1	*	Description
C507	DATE/TIME/PERIOD	M	**M**		
2005	Date or time or period function code qualifier	M an..3	**M**	*	171 = Reference date/time
2380	Date or time or period value	C an..35	**R**		
2379	Date or time or period format code	C an..3	**R**		102 = CCYYMMDD

Segment Notes:

This segment is used to specify dates related to the references provided in the previous RFF segment.

Example:
DTM+171:20021001:102'

5. Segments Layout

Segment number: 29

SG10	- C	9999 -	LIN-PIA-IMD-QTY-GIN-DTM-FTX-MOA-SG11-SG12-SG13
SG12	- C	99 -	NAD-LOC
NAD	- M	1 -	Name and address

Function:

To specify the name/address and their related function, either by C082 only and/or unstructured by C058 or structured by C080 thru 3207.

		EDIFACT	GS1	*	Description
3035	Party function code qualifier	M an..3	**M**	*	JB = Goods collection party DP = Delivery party UC = Ultimate consignee PW = Despatch party
C082	PARTY IDENTIFICATION DETAILS	C	**A**		
3039	Party identifier	M an..35	**M**		For identification of parties it is recommended to use GLN - Format n13.
1131	Code list identification code	C an..17	**N**		
3055	Code list responsible agency code	C an..3	**R**	*	9 = GS1
C058	NAME AND ADDRESS	C	**O**		This composite may only be used to fulfill the requirements of directive 2003/58/EC, article 4.
3124	Name and address description	M an..35	**M**		
3124	Name and address description	C an..35	**O**		
3124	Name and address description	C an..35	**O**		
3124	Name and address description	C an..35	**O**		
3124	Name and address description	C an..35	**O**		
C080	PARTY NAME	C	**D**		
3036	Party name	M an..35	**M**		Party Name in clear text.
3036	Party name	C an..35	**O**		
3036	Party name	C an..35	**O**		
3036	Party name	C an..35	**O**		
3036	Party name	C an..35	**O**		
3045	Party name format code	C an..3	**O**		
C059	STREET	C	**D**		
3042	Street and number or post office box identifier	M an..35	**M**		Building Name/Number and Street Name and/or P.O. Box
3042	Street and number or post office box identifier	C an..35	**O**		
3042	Street and number or post office box identifier	C an..35	**O**		
3042	Street and number or post office box identifier	C an..35	**O**		
3164	City name	C an..35	**D**		City/Town, clear text.
C819	COUNTRY SUB-ENTITY DETAILS	C	**D**		
3229	Country sub-entity name code	C an..9	**O**		

5. Segments Layout

Segment number: 29

		EDIFACT	GS1	*	Description
1131	Code list identification code	C an..17	**O**		
3055	Code list responsible agency code	C an..3	**O**		
3228	Country sub-entity name	C an..70	**O**		County/State, clear text.
3251	Postal identification code	C an..17	**D**		Postal code
3207	Country name code	C an..3	**D**		ISO 3166 two alpha code

Segment Notes:

This segment is used to identify parties relevant to the current line item only. Identification of the delivery party is mandatory at line level if the delivery party has not been previously identified in the NAD segment at heading level.

Example:
NAD+DP+5411234512309::9'

Dependency Notes:
The following composites and data elements are only used when a coded name and address can not be used.
The affected composites and data elements are as follows:
C080 - C059 - 3164 - C819 - 3251 - 3207

5. Segments Layout

Segment number: 30

SG10	- C	9999 -	LIN-PIA-IMD-QTY-GIN-DTM-FTX-MOA-SG11-SG12-SG13
SG12	- C	99 -	NAD-LOC
LOC	- C	99 -	Place/location identification

Function:

To identify a place or a location and/or related locations.

		EDIFACT	GS1	*	Description
3227	Location function code qualifier	M an..3	**M**	*	7 = Place of delivery
C517	LOCATION IDENTIFICATION	C	**A**		
3225	Location name code	C an..25	**A**		GLN - Format n13
1131	Code list identification code	C an..17	**O**		
3055	Code list responsible agency code	C an..3	**O**		9 = GS1 DE 3055 must be used if DE 3225 is used and does not contain an UN/LOCODE.
3224	Location name	C an..256	**O**		
C519	RELATED LOCATION ONE IDENTIFICATION	C	**O**		Specify ultimate delivery location, e.g. a specific point on a works site.
3223	First related location name code	C an..25	**O**		Global Location Number GLN - Format n13
1131	Code list identification code	C an..17	**O**		
3055	Code list responsible agency code	C an..3	**D**		9 = GS1 DE 3055 must be used if DE 3223 is used and does not contain an UN/LOCODE.
3222	First related location name	C an..70	**O**		
C553	RELATED LOCATION TWO IDENTIFICATION	C	**N**		
3233	Second related location name code	C an..25			
1131	Code list identification code	C an..17			
3055	Code list responsible agency code	C an..3			
3232	Second related location name	C an..70			
5479	Relation code	C an..3	**N**		

Segment Notes:

This segment is used to identify the precise location of delivery for the current line item.
It is recommended that Global Location Numbers GLN - Format n13 - be used to identify delivery locations.

Example:
LOC+7+5412345678908::9'

5. Segments Layout

Segment number: 31

SG10	- C	9999 -	LIN-PIA-IMD-QTY-GIN-DTM-FTX-MOA-SG11-SG12-SG13
SG13	- C	9999 -	PCI-GIN
PCI	- M	1 -	Package identification

Function:

To specify markings and labels on individual packages or physical units.

		EDIFACT	GS1	*	Description
4233	Marking instructions code	C an..3	**O**		17 = Supplier's instructions 39 = Marked with Serial Shipping Container Code (SSCC)
C210	MARKS & LABELS	C	**O**		
7102	Shipping marks description	M an..35	**M**		
7102	Shipping marks description	C an..35	**O**		
7102	Shipping marks description	C an..35	**O**		
7102	Shipping marks description	C an..35	**O**		
7102	Shipping marks description	C an..35	**O**		
7102	Shipping marks description	C an..35	**O**		
7102	Shipping marks description	C an..35	**O**		
7102	Shipping marks description	C an..35	**O**		
7102	Shipping marks description	C an..35	**O**		
7102	Shipping marks description	C an..35	**O**		
8275	Container or package contents indicator code	C an..3	**O**		
C827	TYPE OF MARKING	C	**N**		
7511	Marking type code	M an..3			
1131	Code list identification code	C an..17			
3055	Code list responsible agency code	C an..3			

Segment Notes:

This segment is used to provide markings and labels information relevant to the product identified in the LIN segment.

Example:
PCI+17+PERISHABLE FOODSTUFFS'

5. Segments Layout

Segment number: 32

SG10	- C	9999	-	LIN-PIA-IMD-QTY-GIN-DTM-FTX-MOA-SG11-SG12-SG13
SG13	- C	9999	-	PCI-GIN
GIN	- C	9	-	Goods identity number

Function:

To give specific identification numbers, either as single numbers or ranges.

		EDIFACT	GS1	*	Description
7405	Object identification code qualifier	M an..3	**M**	*	AW = Serial shipping container code BJ = Serial shipping container code BN = Serial number BX = Batch number SRV = GS1 Global Trade Item Number (GS1 Temporary Code) In EANCOM it is required to use the Serial Shipping Container Code (SSCC's) for unique identification of individual transport packages.
C208	IDENTITY NUMBER RANGE	M	**M**		
7402	Object identifier	M an..35	**M**		
7402	Object identifier	C an..35	**O**		
C208	IDENTITY NUMBER RANGE	C	**O**		
7402	Object identifier	M an..35	**M**		
7402	Object identifier	C an..35	**O**		
C208	IDENTITY NUMBER RANGE	C	**O**		
7402	Object identifier	M an..35	**M**		
7402	Object identifier	C an..35	**O**		
C208	IDENTITY NUMBER RANGE	C	**O**		
7402	Object identifier	M an..35	**M**		
7402	Object identifier	C an..35	**O**		
C208	IDENTITY NUMBER RANGE	C	**O**		
7402	Object identifier	M an..35	**M**		
7402	Object identifier	C an..35	**O**		

Segment Notes:

This segment is used to provide identification numbers marked on the packaging of the current line item.

Example:
GIN+AW+354123450000000014'

5. Segments Layout

Segment number: 33

UNS - M 1 - Section control				
Function: To separate header, detail and summary sections of a message. Notes: To be used by message designers only when required to avoid ambiguities.				
	EDIFACT	GS1	*	Description
0081 Section identification	M a1	**M**	*	S = Detail/summary section separation
Segment Notes: This segment is used to identify the break between the message detail and summary sections. Example: UNS+S'				

5. Segments Layout

Segment number: 34

MOA	- C	99 - Monetary amount			
Function: To specify a monetary amount.					
		EDIFACT	GS1	*	Description
C516	MONETARY AMOUNT	M	**M**		
5025	Monetary amount type code qualifier	M an..3	**M**		22 = Cash on delivery amount 40 = Customs value 157 = Insurance value
5004	Monetary amount	C n..35	**R**		
6345	Currency identification code	C an..3	**O**		
6343	Currency type code qualifier	C an..3	**N**		
4405	Status description code	C an..3	**N**		

Segment Notes:

This segment is used to specify total monetary values relevant to the complete message, e.g. total cash on delivery amount.

Example:
MOA+22:86651'

5. Segments Layout

Segment number: 35

CNT	- C	9 - Control total			
Function: To provide control total.					
		EDIFACT	GS1	*	Description
C270	CONTROL	M	**M**		
6069	Control total type code qualifier	M an..3	**M**		1 = Total value of the quantity segments at line level in a message 2 = Number of line items in message
6066	Control total value	M n..18	**M**		
6411	Measurement unit code	C an..3	**O**		

Segment Notes:

This segment is used to provide message control information for checking on the message receiver's in-house system.

Example:
CNT+2:12'

5. Segments Layout

Segment number: 36

UNT - M 1 - Message trailer					
Function: To end and check the completeness of a message. Notes: 1. 0062, the value shall be identical to the value in 0062 in the corresponding UNH segment.					
		EDIFACT	GS1	*	Description
0074	Number of segments in a message	M n..10	**M**		The total number of segments in the message is detailed here.
0062	Message reference number	M an..14	**M**		The message reference numbered detailed here should equal the one specified in the UNH segment.
Segment Notes: This segment is used to end and check the completeness of a message. The UNT segment is a mandatory UN/EDIFACT segment. It must always be the last segment in the message. Example: UNT+42+ME000001'					

5. Segments Layout

Segment number: 37

UNZ - M 1 - Interchange trailer					
Function: To end and check the completeness of an interchange. Notes: 1. 0020, the value shall be identical to the value in 0020 in the corresponding UNB segment.					
		EDIFACT	GS1	*	Description
0036	Interchange control count	M n..6	**M**		Number of messages or functional groups within an interchange.
0020	Interchange control reference	M an..14	**M**		Identical to DE 0020 in UNB segment.
Segment Notes: This segment is used to provide the trailer of an interchange. DE 0036: If functional groups are used, this is the number of functional groups within the interchange. If functional groups are not used, this is the number of messages within the interchange. UNZ+5+12345555'					

6. Examples

Example 1 - Instruction to despatch articles

The following is an example of an Instruction To Despatch message sent on the 15th of January 2002 by the ordering party identified by GLN 5411234512309 to the logistic service provider identified by GLN 5412345123453.

The message which is identified by the number 45223, relates to the despatch of articles ordered by the buyer using the order number 2335-AX which are to be delivered cash on delivery to the delivery party identified by GLN 5487654111118 on the 16th of January 2002. The total cash on delivery amount for the complete message is detailed as being 86651 Euros.

The detail section of the message indicates the quantity of each product, all of which are identified using GTINs, which must be despatched.

UNH+ME000001+INSDES:D:01B:UN:EAN003'	Message header
BGM+350+45223+9'	Instruction to despatch number 45223
DTM+137:20020115:102'	Message date 15th January 2002
DTM+2:20020116:102'	Requested delivery date/time 16th January 2002
FTX+DEL+++CASH ON DELIVERY'	Delivery information: delivered cash on delivery
RFF+ON:2335-AX'	Reference order number 2335-AX'
NAD+OB+5411234512309::9'	Ordered by identified with GLN 5411234512309
NAD+DP+5487654111118::9'	Delivery party identified with GLN 5487654111118
NAD+LSP+5412345123453::9'	Logistic service provider identified with GLN 5412345123453
LIN+1++5412345123453:SRV'	Line item number 1 GTIN 5412345123453
IMD+F++:::CORN CRISPIES:CASE'	Description of the item
QTY+113:40'	Quantity to be delivered 40
LIN+2++5412345222224:SRV'	Line item number 2 GTIN 5412345222224
IMD+F++:::CRUNCHY BISCUITS'	Description of the item
QTY+113:60'	Quantity to be delivered 60
LIN+3++5412345333333:SRV'	Line item number 3 GTIN 5412345333333
IMD+F++:::PEELED TOMATOES'	Description of the item
QTY+113:90'	Quantity to be delivered 90
UNS+S'	Break between the detail section and the summary section
MOA+22:86651:EUR'	The total monetary amount cash on delivery 86.651 EUR
CNT+2:3'	Number of line items in the message 3
UNT+22+ME000001'	Total number of segments in the message equals 22

Example 2 - Instruction to despatch articles to different locations on different dates

The following is an example of an Instruction To Despatch message sent on the 7th of January 2002 by the ordering party identified by GLN 5432165999991 to the logistic service provider identified by GLN 5461616111118.

The message which is identified by the number 3223, relates to the despatch of articles which were previously manipulated (packed and labelled) using the cargo/goods handling and movement message with the reference HAN8755. In addition it is specified that the transporter to be used to carry out the delivery is to be ABC Carriers.

The message details three products identified by GTINs which are to be delivered over two dates to three different delivery parties identified by GLNs.

GTIN	Quantity	Date	GLN
5012345959559 5474125232328 5078965252524	40 120 80	09/01/2002	5485421111118
5012345959559 5078965252524	40 220	09/01/2002	5485421212129
5012345959559 5474125232328 5078965252524	40 24 24	10/01/2002	5485421333336

UNH+ME000001+INSDES:D:01B:UN:EAN003'	Message header
BGM+350+3223+9'	Instruction to despatch number 3223
DTM+137:20020107:102'	Message date 7th January 2002
RFF+HN:HAN8755'	Handling and movement reference number HAN8755
NAD+OB+5432165999991::9'	Ordered by identified with GLN 5432165999991
NAD+LSP+5461616111118::9'	Logistic service provider identified with GLN 5461616111118
TDT+20++30+31+:::ABC CARRIERS'	Transported by truck from ABC Carriers
LIN+1++5012345959559:SRV'	Line item number 1 GTIN 5012345959559
QTY+113:40'	Quantity to be delivered 40
DTM+2:20020109:102'	Delivery date/time 9th January 2002
NAD+DP+5485421111118::9'	Delivery party identified using GLN 5485421111118
LIN+2++5474125232328:SRV'	Line item number 2 GTIN 5474125232328
QTY+113:120'	Quantity to be delivered 120
DTM+2:20020109:102'	Delivery date/time 9th January 2002
NAD+DP+5485421111118::9'	Delivery party identified using GLN 5485421111118
LIN+3++5078965252524:SRV'	Line item number 3 GTIN 5078965252524
QTY+113:80'	Quantity to be delivered 80
DTM+2:20020109:102'	Delivery date/time 9th January 2002

NAD+DP+5485421111118::9'	Delivery party identified using GLN 5485421111118
LIN+4++5012345959559:SRV'	Line item number 4 GTIN 5012345959559
QTY+113:40'	Quantity to be delivered 40
DTM+2:20020109:102'	Delivery date/time 9th January 2002
NAD+DP+5485421212129::9'	Delivery party identified using GLN 5485421212129
LIN+5++5078965252524:SRV'	Line item number 5 GTIN 5078965252524
QTY+113:220'	Quantity to be delivered 220
DTM+2:20020109:102'	Delivery date/time 9th January 2002
NAD+DP+5485421212129::9'	Delivery party identified using GLN 5485421212129
LIN+6++5012345959559:SRV'	Line item number 6 GTIN 5012345959559
QTY+113:40'	Quantity to be delivered 40
DTM+2:20020110:102'	Delivery date/time 10th January 2002
NAD+DP+5485421333336::9'	Delivery party identified using GLN 5485421333336
LIN+7++5474125232328:SRV'	Line item number 7 GTIN 5474125232328
QTY+113:24'	Quantity to be delivered 24
DTM+2:20020110:102'	Delivery date/time 10th January 2002
NAD+DP+5485421333336::9'	Delivery party identified using GLN 5485421333336
LIN+8++5078965252524:SRV'	Line item number 8 GTIN 5078965252524
QTY+113:24'	Quantity to be delivered 24
DTM+2:20020110:102'	Delivery date/time 10th January 2002
NAD+DP+5485421333336::9'	Delivery party identified using GLN 5485421333336
UNS+S'	Break between the detail section and the summary section
CNT+2:8'	Number of line items in the message 8
CNT+1:588'	Number of total algebraic of the quantity values in line items in a message 588
UNT+43+ME000001'	Total number of segments in the message equals 43

Example 3 - Instruction to despatch articles identified by EAN.UCC SSCC's

The following is an example of an Instruction To Despatch message sent on the 20th of January 2002 by the ordering party identified by GLN 5411234512309 to the logistic service provider identified by GLN 5412345123453.

The message which is identified by the number 9663, relates to the despatch of articles ordered by the buyer using the order number 2335-AX and which were packed as mixed pallets following instructions contained in the cargo/goods handling and movement message identified by the number 633-AV.

The message details an instruction to despatch two mixed pallets identified by EAN.UCC Serial Shipping Container Codes to the delivery party identified by GLN 5477777111119 on the 24th of January 2002.

6. Examples

UNH+ME000001+INSDES:D:01B:UN:EAN003'	Message header
BGM+350+9663+9'	Instruction to despatch number 9663
DTM+137:20020120:102'	Message date 7th January 2002
DTM+2:20020124:102'	Delivery date/time 24th January 2002
RFF+ON:2335-AX'	Reference order number 2335-AX'
RFF+HN:633-AV'	Handling and movement reference number 633-AV
NAD+OB+5411234512309::9'	Ordered by identified with GLN 5411234512309
NAD+DP+5477777111119::9'	Delivery party identified with GLN 5477777111119
NAD+LSP+5412345123453::9'	Logistic service provider identified with GLN 5412345123453
LIN+1'	Line item 1
IMD+F++:::MIXED PALLET:FOODSTUFFS'	Description of the goods food stuffs
GIN+BJ+354107380000001051'	EAN.UCC SSCC 354107380000001051
LIN+2'	Line item 2
IMD+F++:::MIXED PALLET:FOODSTUFFS'	Description of the goods food stuffs
GIN+BJ+354107380000001068'	EAN.UCC SSCC 354107380000001068
UNS+S'	Break between the detail section and the summary section
MOA+22:86651:EUR'	The total monetary amount cash on delivery 86651 EUR
CNT+2:2'	Number of line items in the message 2
UNT+19+ME000001'	Total number of segments in the message equals 19

Note :
The EDI interchange will include the UNB..UNZ segments and, if applicable, the UNG..UNE segments. (See part 1 section 5.7).